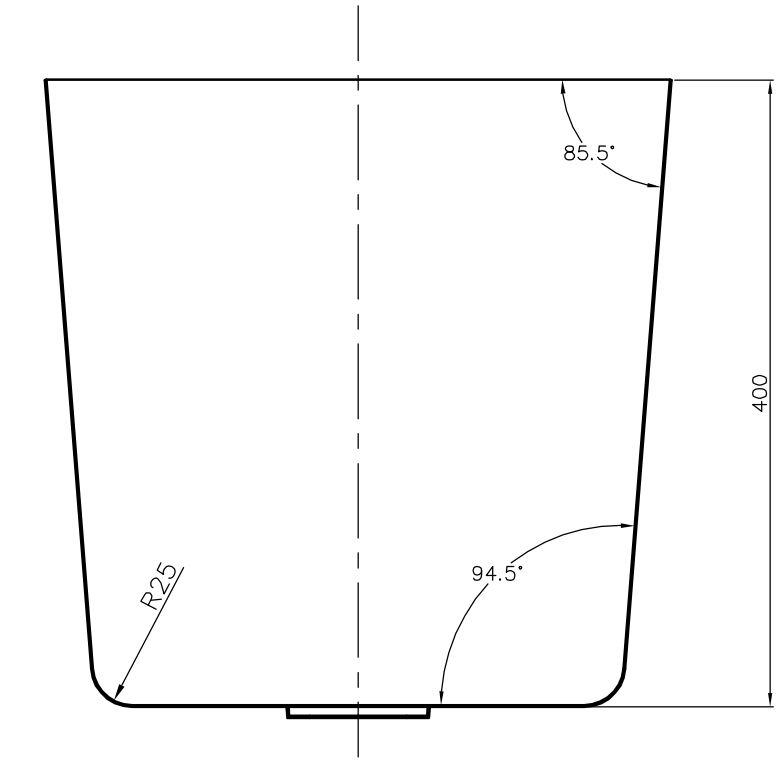

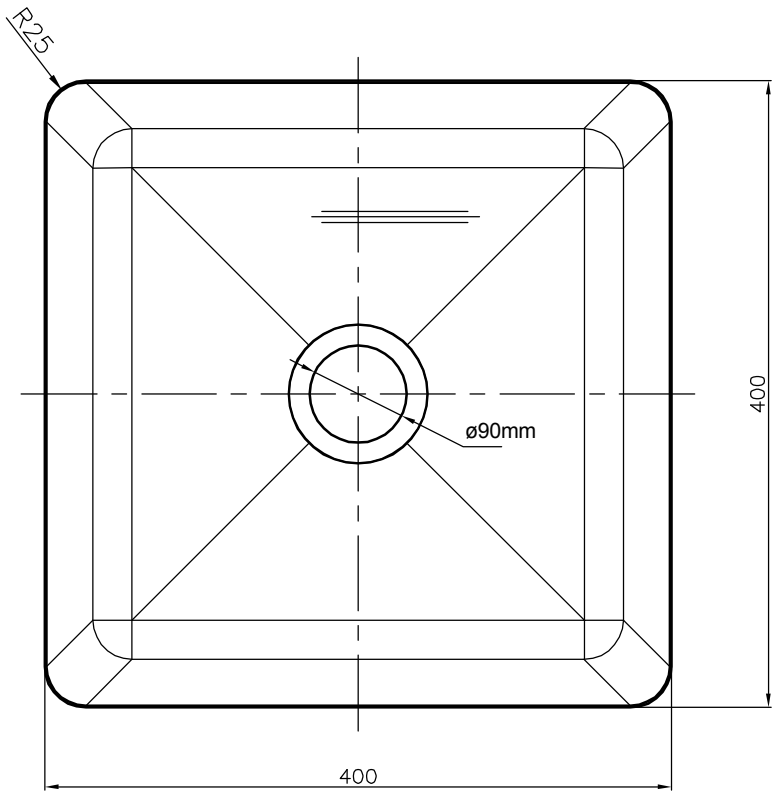

interchange
sales & marketing pty ltd

Fabricated Bowl

Code: FB404
Dimensions: 400 x 400 x 400mm (1.2mm)